# Basic Pneumatic Setup

**3 / 2 - Electrical Pneumatic Valve**
**Single Acting Push Cylinder** (Spring Pull IN - NO air)
**Single Acting Pull Cylinder** (Spring Push OUT - NO air)

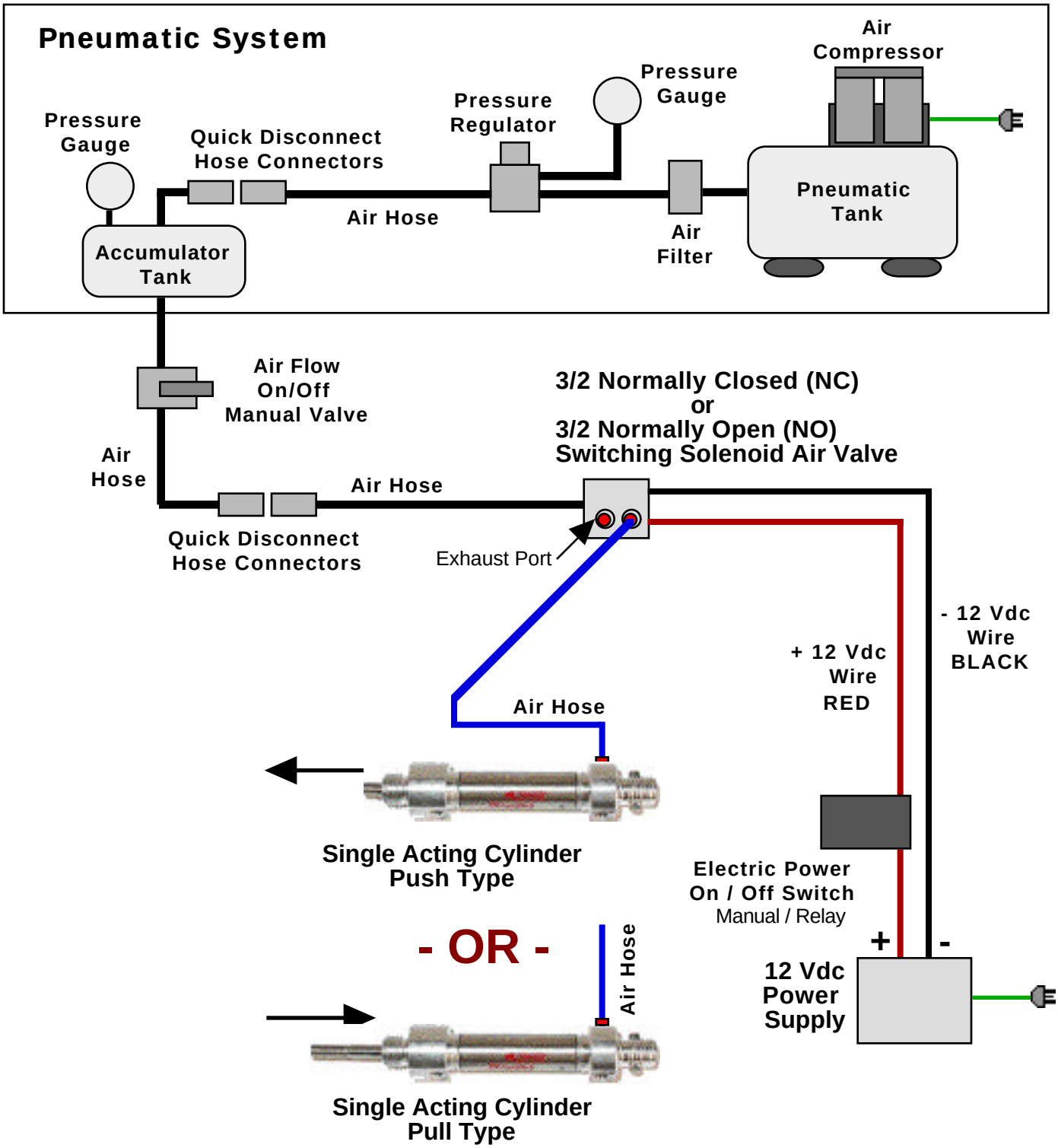



**Custom Equipment, Unique Electronic Products**

**Blue Point Engineering**

www.BPEsolutions.com
Phone (303) 651-3794

# Basic Pneumatic Setup

**5 / 2 - Electrical Pneumatic Valve**
**Double Acting Cylinder**

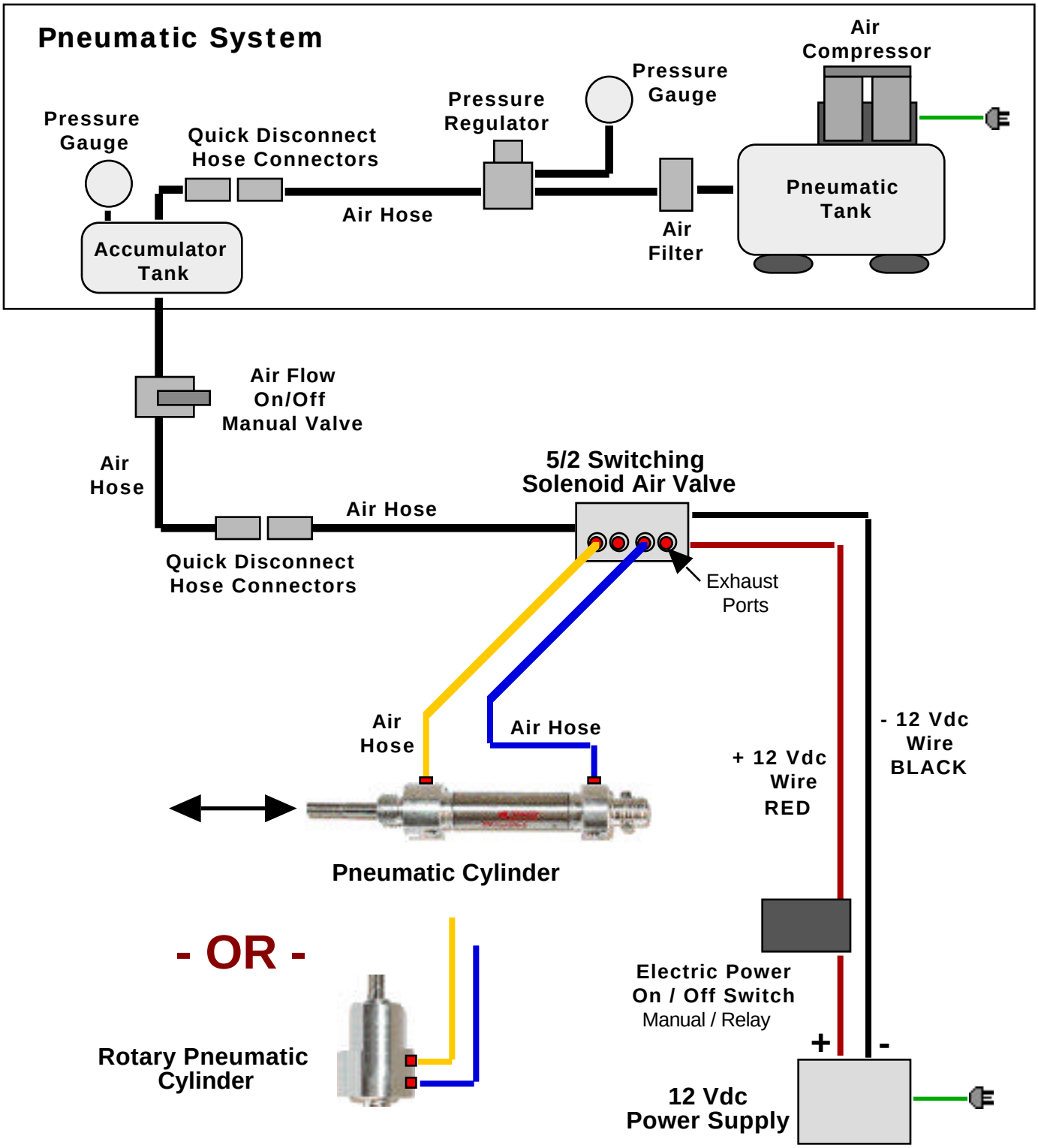



**Custom Equipment, Unique Electronic Products**

**Blue Point Engineering**

www.BPEsolutions.com
Phone (303) 651-3794

# Advanced Pneumatic Setup

Instruction I

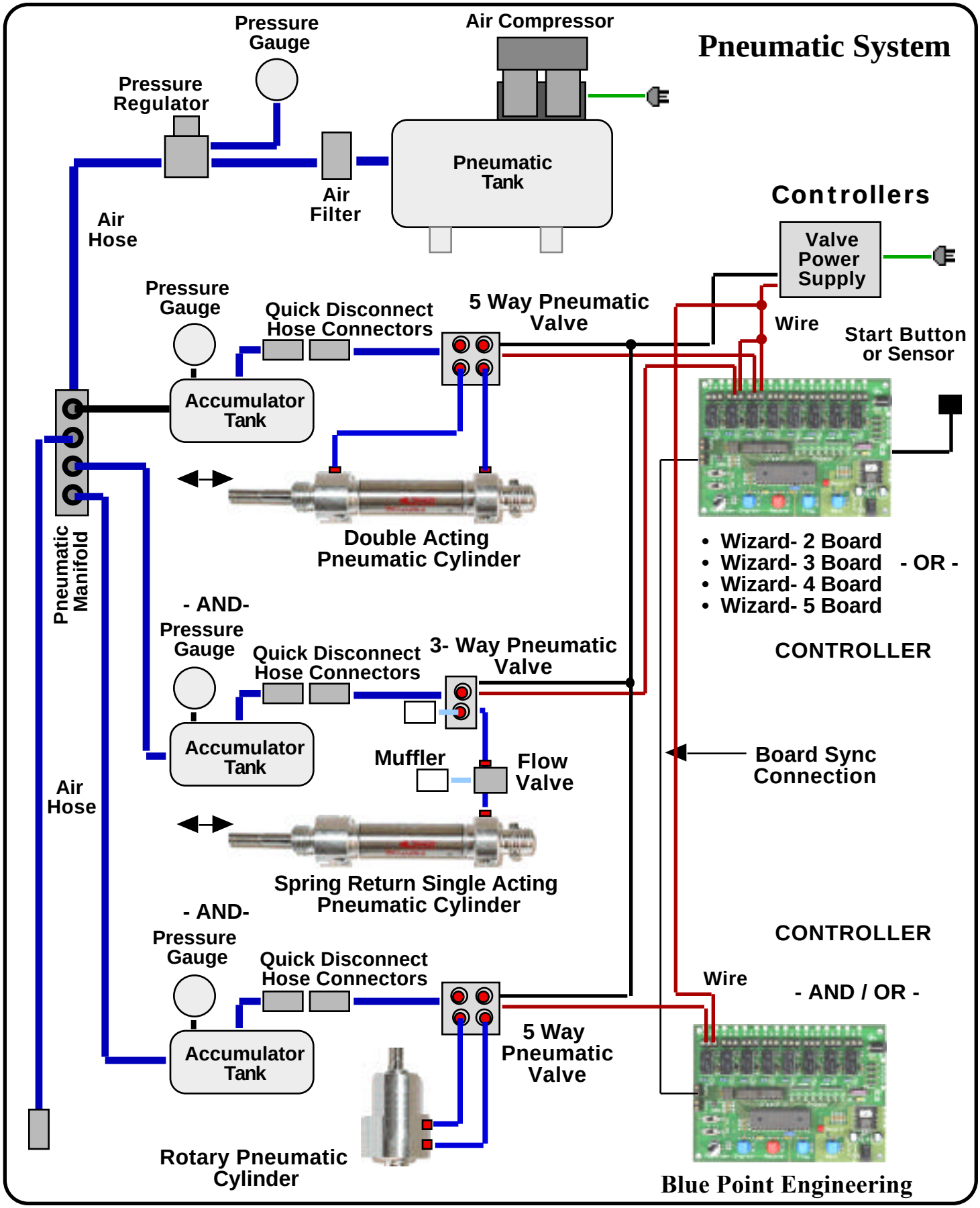

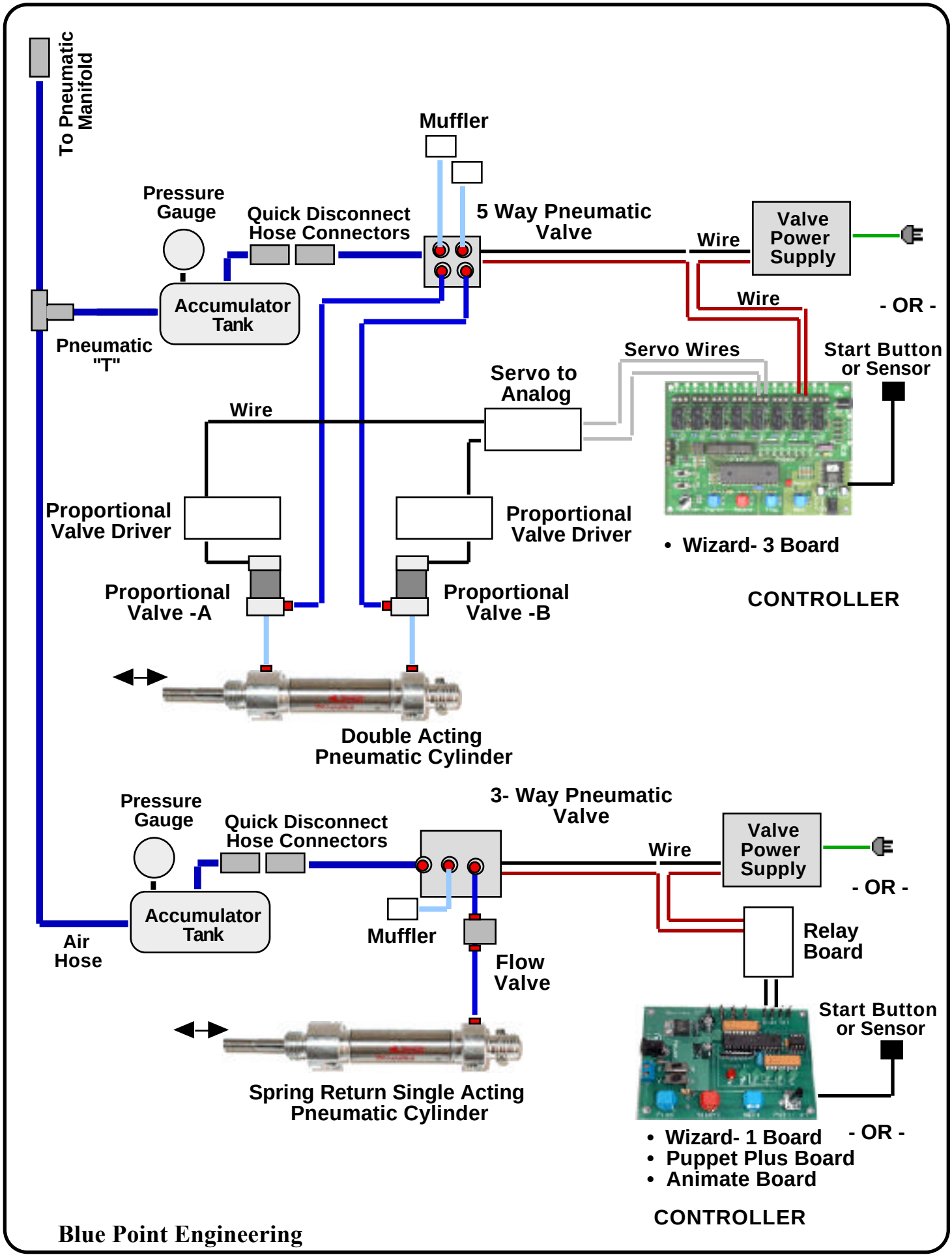
To Pneumatic Manifold
Muffler
Pressure Gauge
Quick Disconnect Hose Connectors
5 Way Pneumatic Valve
Wire
Valve Power Supply
Wire
- OR -
Accumulator Tank
Pneumatic "T"
Servo Wires
Start Button or Sensor
Servo to Analog
Wire
Proportional Valve Driver
Proportional Valve Driver
• Wizard- 3 Board
Proportional Valve -A
Proportional Valve -B
CONTROLLER
Double Acting Pneumatic Cylinder
Pressure Gauge
3- Way Pneumatic Valve
Quick Disconnect Hose Connectors
Wire
Valve Power Supply
- OR -
Accumulator Tank
Air Hose
Muffler
Relay Board
Flow Valve
Start Button or Sensor
Spring Return Single Acting Pneumatic Cylinder
- OR -
• Wizard- 1 Board
• Puppet Plus Board
• Animate Board
CONTROLLER
Blue Point Engineering