MM28

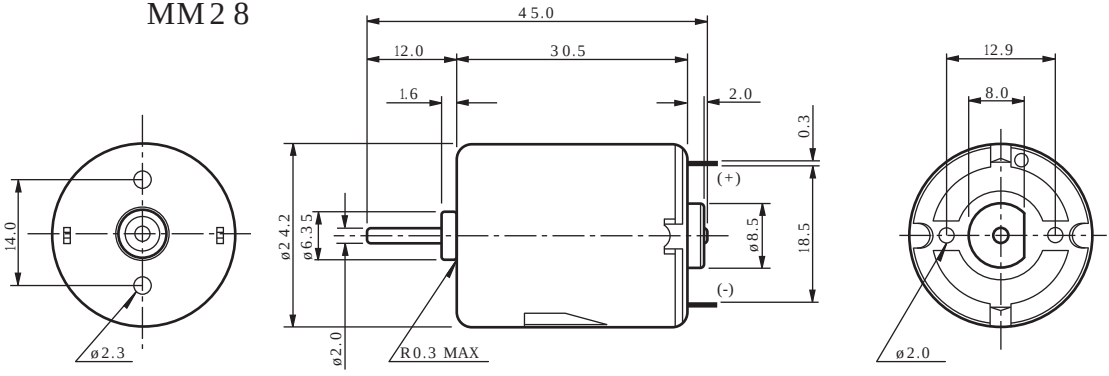

NOMINAL	NO LOAD		AT MAXIMUM EFFICIENCY					
Constant Volts	Speed rpm	Current A	Speed rpm	Current A	Torque g-cm	Output W	Efficiency %	Stall Torque g-cm
3.0V	9700	0.15	7930	0.76	15.0	1.22	53.3	122
6.0V	17100	0.21	14700	1.28	26.5	4.0	52.0	220